CIRCUIT IS DRAWN FOR A VALVE IN THE FULLY CLOSED POSITION

Circuit Diagram No - Issue No

5P06Q00 - 1

CIRCUIT IS DRAWN FOR A VALVE IN THE FULLY CLOSED POSITION

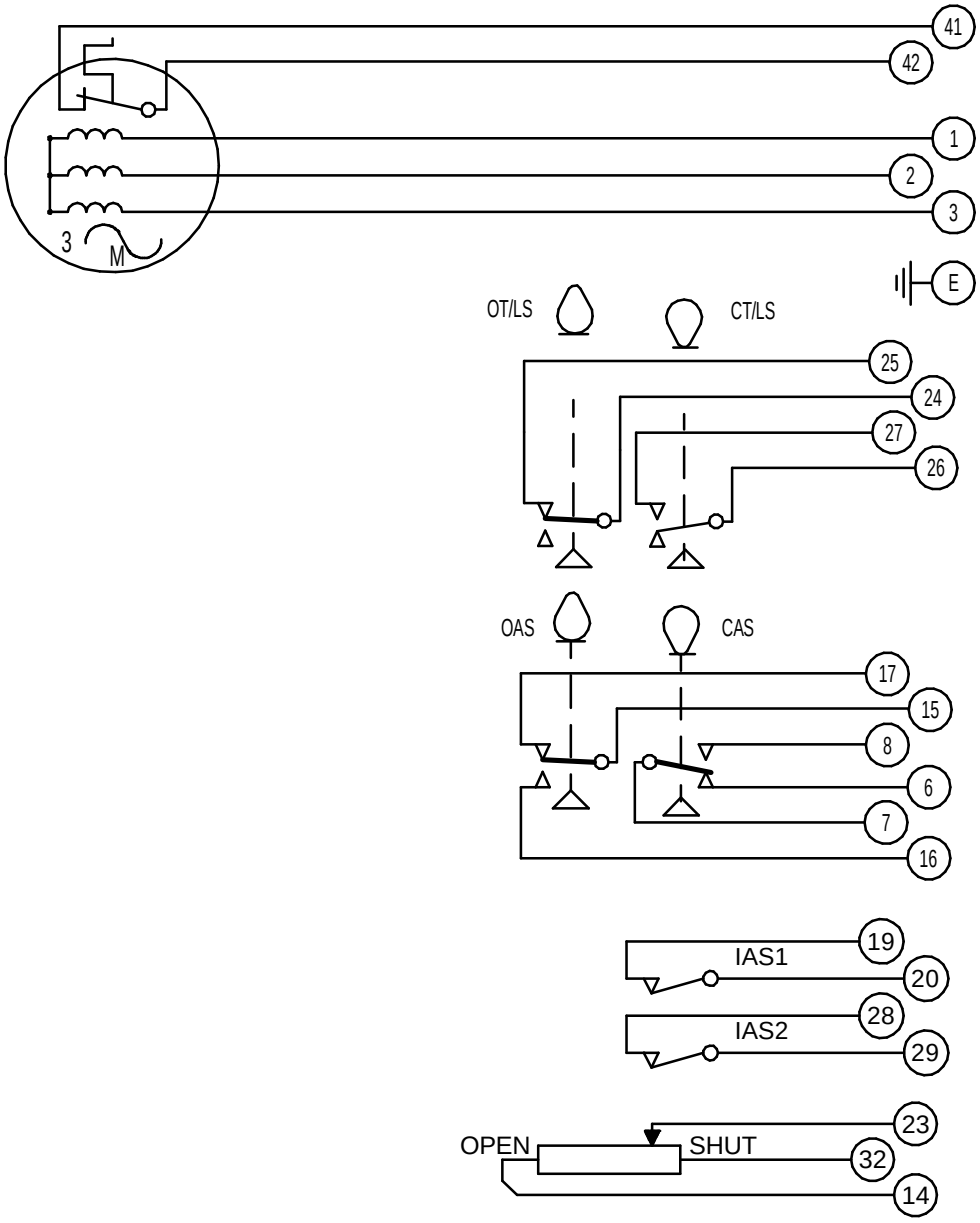

THERMOSTAT

3 PHASE SUPPLY

OT/LS - OPEN TORQUE/LIMIT SWITCH.

CT/LS - CLOSE TORQUE/LIMIT SWITCH.

OAS - OPEN AUXILIARY SWITCH.

CAS - CLOSE AUXILIARY SWITCH.

IAS1 & 2 - INTERMEDIATE AUXILIARY SWITCHES ADJUSTABLE TO MAKE OR BREAK INDIVIDUALLY AT ANY POSITION.

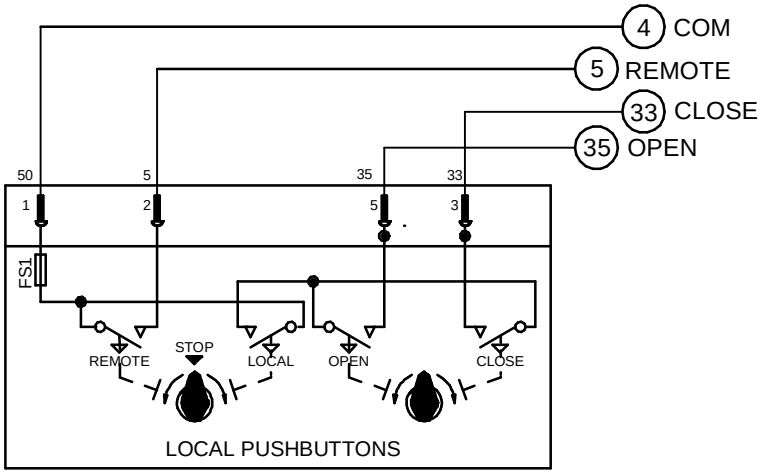

WIRES ARE IDENTIFIED AT EACH END BY TERMINAL NUMBER OR NUMBER SHOWN.

ALLOW MINIMUM 2 SECOND DELAY WHEN CONTROL SIGNALS ARE REVERSED TO ENSURE MOTOR REVERSAL.

WARNING

IT IS ESSENTIAL THAT REMOTE CONTROL CIRCUITS ARE DESIGNED SO THAT AN OPEN AND A CLOSE SIGNAL CAN NEVER BE APPLIED SIMULTANEOUSLY.

Iss	Date	Chkd	Revision Details
01	130418	JS	FIRST PRODUCTION ISSUE

centork

ROTORK CONTROLS (INDIA) PRIVATE LTD
28B, AMBATTUR INDUSTRIAL ESTATE (NORTH),
AMBATTUR, CHENNAI - 600 098 INDIA.
Tel:044-39555600

Q - 3 PHASE + PUSH BUTTON + POT + INTERMEDIATE SWITCHES

Drawn by: JS
Date : 130418
Base WD: 5S00Q00
Job No : ---
MI No : .

Circuit Diagram No: 5P06Q00

Issue No: 1